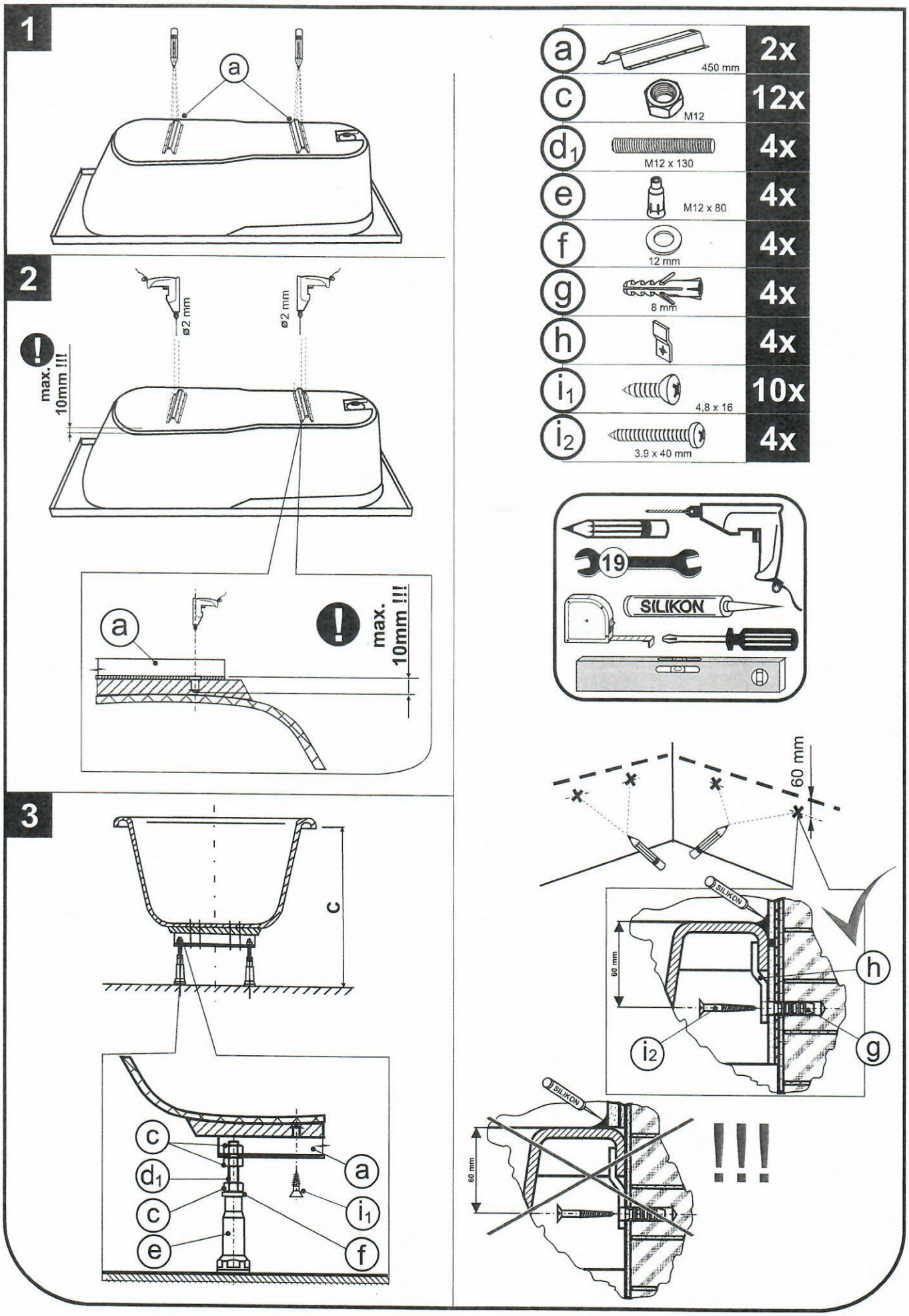
1
a
2
ø2 mm
ø2 mm
max. 10mm !!!
a
max. 10mm !!!
3
c
c
d1
c
e
a
i1
f
a
450 mm
2x
c
M12
12x
d1
M12 x 130
4x
e
M12 x 80
4x
f
12 mm
4x
g
8 mm
4x
h
4x
i1
4,8 x 16
10x
i2
3.9 x 40 mm
4x
19
SILIKON
60 mm
SILIKON
60 mm
h
i2
g
SILIKON
60 mm
!!!